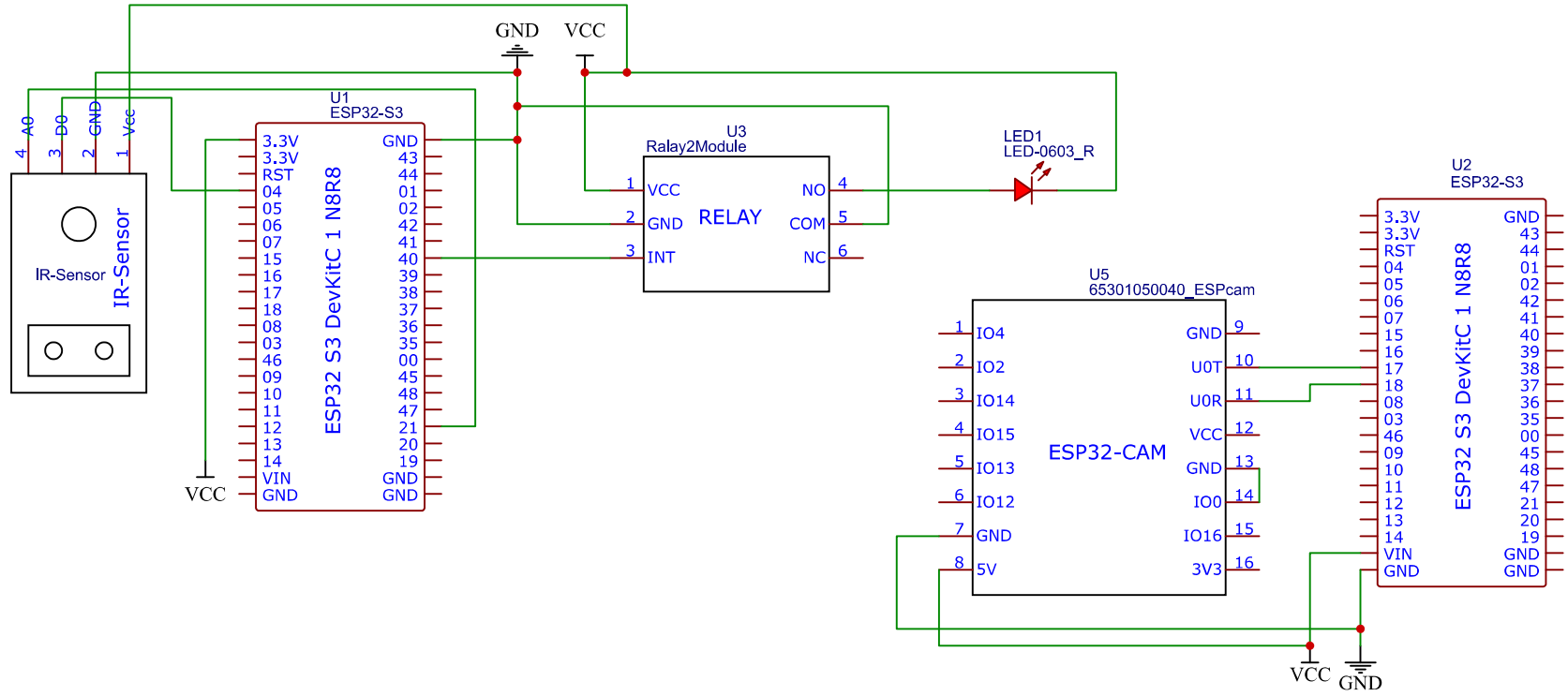

TITLE: Sheet_1		REV: 1.0
EasyEDA	Company:	Sheet: 1/1
	Date: 2025-03-13 Drawn By:	